MAX TECHNOLOGIES
Weighing Solutions

A570-DL

Double Ended Beam Type With Digital output Load Cell



FEATURES

- Digital Output Signal(RS-485)
- Nominal Load 10t-50t
- Dual-Shear Beam
- Easy To Install
- Alloy Steel
- Hermetically Sealed

TECHNICAL DATA

Accuracy Class	C3
Capacity	10t ,20t ,25t ,30t ,40t ,50t
Protection Class	IP68
Combined Error	≤±0.020% F.S
Creep Error	≤±0.016% F.S/30min
Temperature Effect On Sensitivity	≤±0.011% F.S/10℃
Temperature Effect On Zero	≤±0.019% F.S/10℃
Temperature, Compensate	-10～+40℃
Temperature ,Operating	-10～+50 ℃
Safe Overload	120 %F·S
Ultimate Overload	150 %F·S
N Max	3000
V Min	Emax/7500
Measuring Speed Rate	112,56,28,14,7,3 Hz
Excitation	6～15 V DC
Communication Interface	RS 485
Communication Baud Rate	19200 Bps
Max Communication Distance	1000m
Rated Output	1000000 Counts

The technical data given here serve only as a product description and must not be interpreted as guaranteed characteristics in the legal sense.

A570-DL

OUTLINE DIMENSIONS (in millimeters):

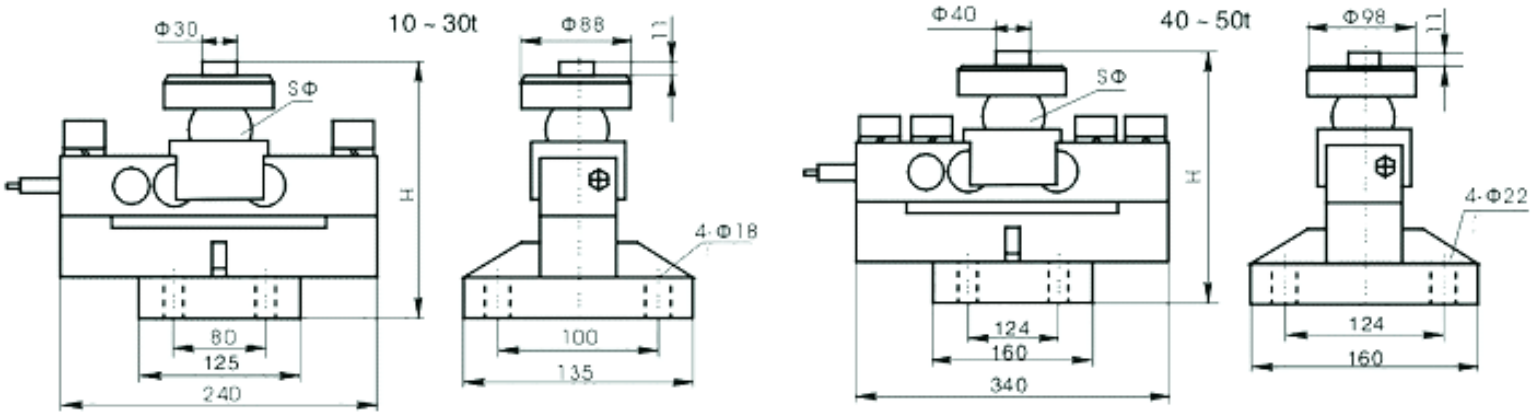

Correct Mounting of Load Cells Is Essential To Ensure Optimum Performance.

3193 N, Drinkwater Blvd, P.O.Box 32662, Scottsdale, AZ 85251, U.S.A

Phone: # 480-240-1299
Fax: # 480-240-1300
Email: Info@themaxtechnologies.com

Max Technologies reserves the right make changes to the technology, features, specification and design of the equipment without notice.